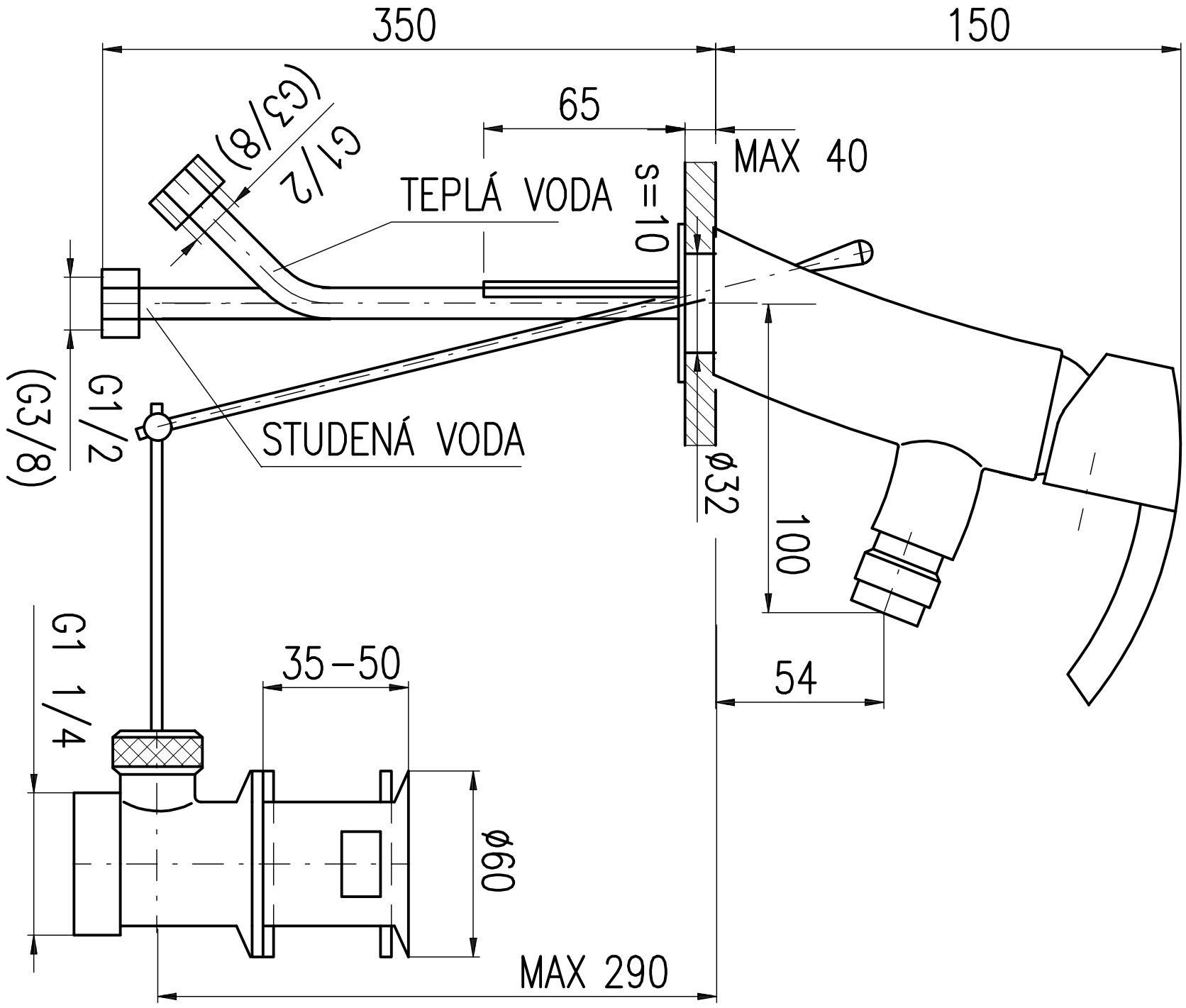
350
150
65
MAX 40
G1/2
(G3/8)
TEPLÁ VODA
s = 10
G1/2
(G3/8)
STUDENÁ VODA
ø32
100
54
G1 1/4
35–50
ø60
MAX 290