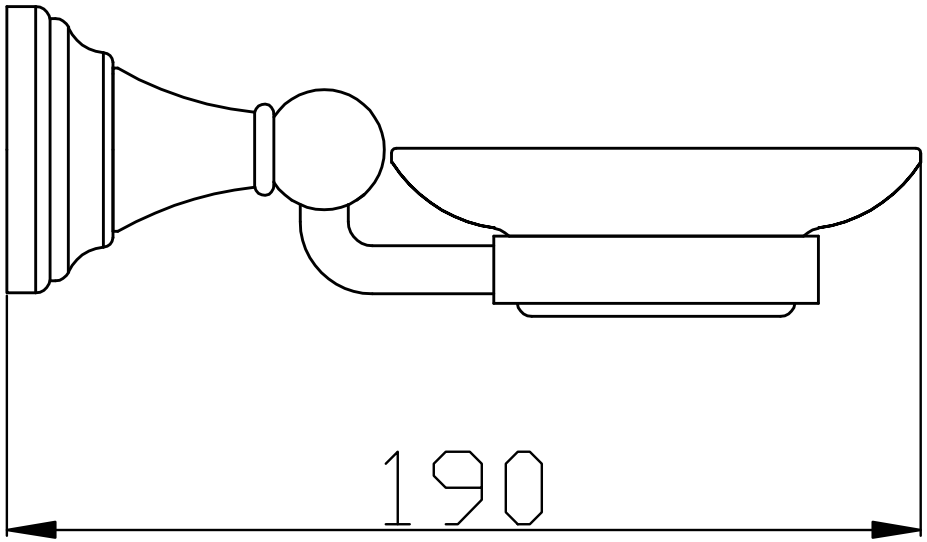
190

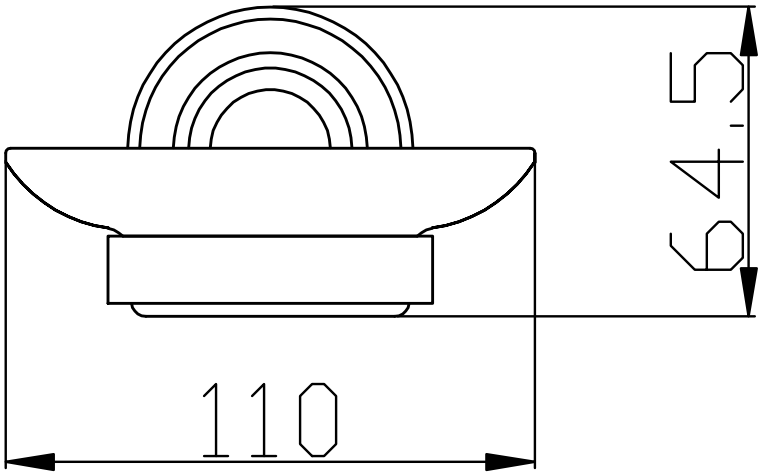
64.5
110